STEERING SYSTEM

PRECAUTION

1. HANDLING PRECAUTIONS ON STEERING SYSTEM

(a) Care must be taken when replacing parts. Incorrect replacement may affect the performance of the steering system and result in a driving hazard.

2. HANDLING PRECAUTIONS ON SRS AIRBAG SYSTEM

(a) The vehicle is equipped with SRS (Supplemental Restraint System) such as the driver airbag and front passenger airbag. Failure to carry out service operation in the correct sequence could cause the SRS to unexpectedly deploy during servicing, possibly leading to a serious accident. Before servicing (including removal or installation of parts, inspection or replacement), be sure to read the precautionary notice for the supplemental restraint system (See page RS-1).

cardiagn.com

PROBLEM SYMPTOMS TABLE

Use the table below to help you find the cause of the problem. The numbers indicate the probability of the cause of the problem. Check each part in the order shown. If necessary, repair or replace these parts.

STEERING SYSTEM

Symptom	Suspected area	See page
Hard steering	1. Tires (Improperly inflated)	TW-4
	2. Power steering fluid level (Low)	PS-2
	3. Front wheel alignment (Incorrect)	SP-4
	4. Steering system joints (Worn)	-
	5. Suspension arm ball joints (Worn)	SP-28
	6. Steering column (Binding)	-
	7. Power steering vane pump	PS-14
	8. Power steering gear	PS-17
Poor return	1. Tires (Improperly inflated)	TW-4
	2. Front wheel alignment (Incorrect)	SP-4
	3. Steering column (Binding)	-
	4. Power steering gear	PS-17
Excessive play	1. Steering system joints (Worn)	-
	2. Suspension arm ball joints (Worn)	SP-28
	3. Intermediate shaft, Sliding yoke (Worn)	-
	4. Front wheel bearing (Worn)	AH-5
	5. Power steering gear	PS-17
Abnormal noise	1. Power steering fluid level (Low)	PS-2
	2. Steering system joints (Worn)	-
	3. Power steering vane pump	PS-14
	4. Power steering gear	PS-17

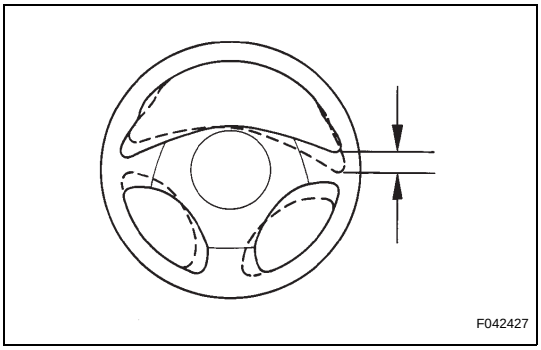

ON-VEHICLE INSPECTION

1. CHECK STEERING WHEEL FREEPLAY

(a) Stop the vehicle and face the tires straight ahead.

(b) Rock the steering wheel gently up and down by your hand, check the steering wheel freeplay.

Maximum freeplay:
30 mm (1.18 in.)

cardiagn.com